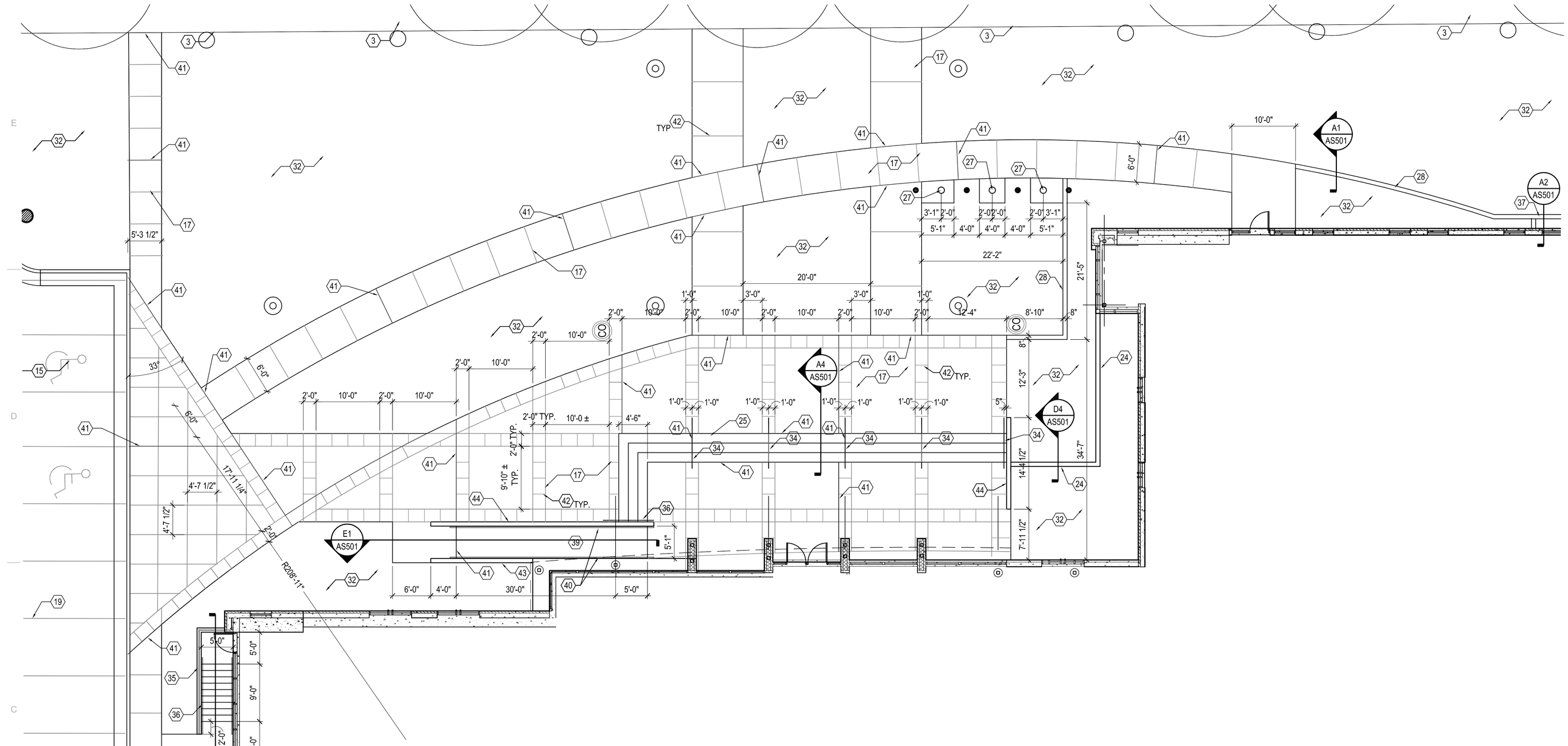

1 ENLARGED ENTRY PLAN
1/8"=1'-0"

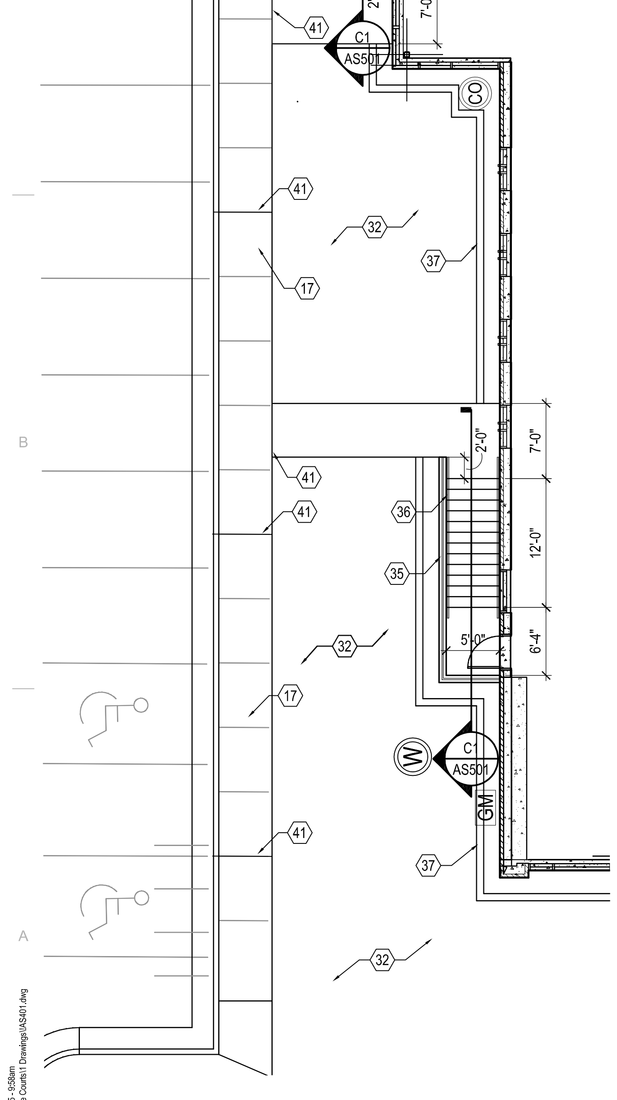

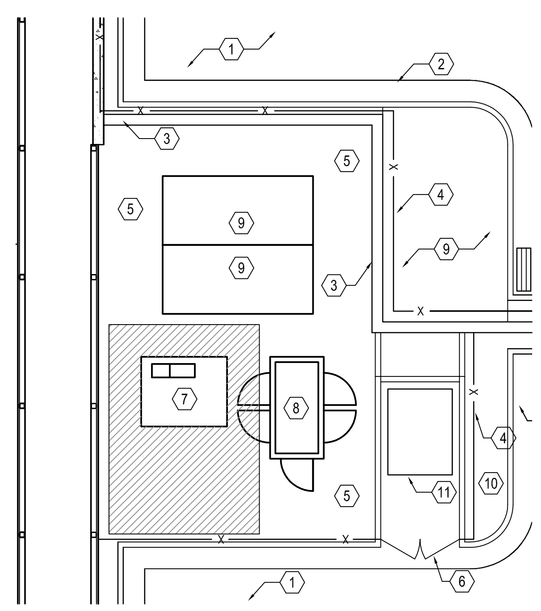

2 ENLARGED MECHANICAL ENCLOSURE PLAN
1/8"=1'-0"

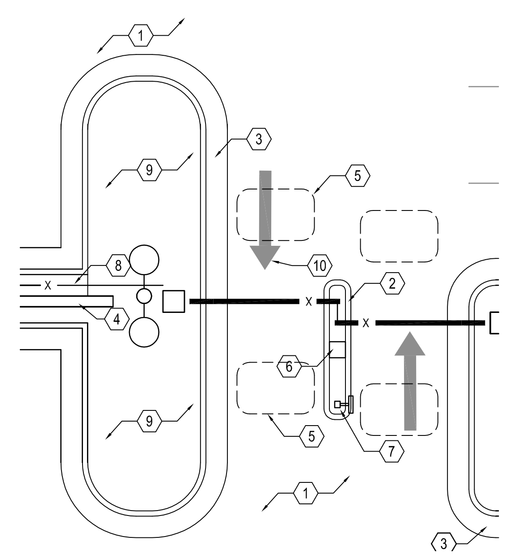

3 ENLARGED SECURE ENTRANCE PLAN
1/8"=1'-0"

KEYNOTES

1. EXISTING ASPHALT PAVING
2. EXISTING CURB AND GUTTER
3. EXISTING CONCRETE SIDE WALK
4. EXISTING CONCRETE PAVING
5. EXISTING PARKING STRIPING
6. EXISTING CATCH BASIN
7. EXISTING CHAIN LINK FENCE
8. EXISTING ELECTRICAL EQUIPMENT - SEE ELECTRICAL
9. EXISTING MECHANICAL EQUIPMENT - SEE MECHANICAL
10. EXISTING RETAINING WALL
11. EXISTING STAIRS
12. EXISTING BOLLARD
13. EXISTING TREE
14. EXISTING LANDSCAPING
15. ASPHALT PAVING - SEE CIVIL
16. CURB AND GUTTER - SEE CIVIL
17. CONCRETE SIDE WALK - SEE CIVIL
18. CONCRETE PAVING - SEE CIVIL
19. PARKING STRIPING - SEE CIVIL
20. CATCH BASIN - SEE CIVIL
21. CHAIN LINK FENCE - SEE B3/AS501
22. ELECTRICAL EQUIPMENT - SEE ELECTRICAL
23. MECHANICAL EQUIPMENT - SEE MECHANICAL
24. RETAINING WALL - SEE C4/AS501
25. CONCRETE STAIRS - SEE A4/AS501
26. BOLLARD - SEE B2/AS501
27. FLAG POLE - SEE A3/AS501
28. CONCRETE MOW STRIP - SEE A1/AS501
29. ARCHITECTURAL COLUMN - SEE ARCHITECTURA
30. TRASH ENCLOSURE - SEE C3/AS501
31. SECURITY GATE - SEE 3/AS401 & SPECIFICATION
32. LANDSCAPING
33. LIMIT OF WORK
34. HANDRAIL - SEE B4/AS501
35. CONCRETE STAIRS - SEE C1/AS501
36. HANDRAIL - SEE C5/AS501
37. GRAVEL & CONCRETE MOWSTRIP - SEE A2/AS50
38. REPAIR EXISTING LANDSCAPING
39. ACCESSIBLE RAMP
40. HANDRAIL @ ACCESSIBLE RAMP - SEE B5/AS501 E5/AS501
41. EXPANSION JOINT
42. SCORE JOINT
43. CHEEK WALL - SEE A4/AS501 SIM.
44. CONCRETE WALL - SEE ARCHITECTURAL ELEVATIONS FOR HEIGHT

KEYNOTES

THESE KEY NOTES APPLY ONLY TO 3/AS401

1. ASPHALT PAVING
2. CONCRETE CURB AND GUTTER
3. SEGMENTAL RETAINING WALL
4. CHAIN LINK SECURITY FENCE
5. CONCRETE PAVING
6. CHAIN LINK GATE
7. TRANSFORMER
8. GENERATOR
9. CHILLER UNIT
10. LANDSCAPED AREA
11. TRASH DUMPSTER

KEYNOTES

1. ASPHALT PAVING
2. CONCRETE CURB
3. CONCRETE CURB AND GUTTER
4. SEGMENTED RETAINING WALL
5. LOOP DETECTOR
6. GATE OPERATOR
7. CARD READER
8. CHAIN LINK SECURITY FENCE
9. LANDSCAPED AREA
10. PAINT STRIPING

MHTN ARCHITECTS, INC.
420 East South Temple
Suite 100
Salt Lake City, Utah 84111
Telephone (801) 595-6700
Telefax (801) 595-6717
www.mhtn.com

TOOELE THIRD DISTRICT AND JUVENILE COURT BUILDING

100 SOUTH 100 EAST
TOOELE, UTAH
DFCM PROJECT NO. 04160150

SEAL

MHTN PROJECT NO. 2004577.00
DRAWN BY: CHECKED BY:

ISSUED:

NO.	DATE	DESCRIPTION
1	06.16.05	100% CONSTRUCTION DOCUMENTS

REVISIONS:

NO.	DATE	DESCRIPTION
1	06.28.05	ADDENDUM 1
2	07.01.05	ADDENDUM 2
3	07.05.05	ADDENDUM 3
4	08.05.05	DFCM COMMENTS/ ALTERNATES

SITE PLAN

100% CONSTRUCTION DOCUMENT SET

SHEET NUMBER

AS401

By: JoeW Sep 13, 2005 - 9:58am
K:\Proj\2004577 Tooele Courts\1 Drawings\AS401.dwg